WT-A3340-HS

High Pass Filter

Technical Data Sheet

S/N	Item	Parameters
1	Cut Off Frequency	11.5GHz
2	Pass Band Frequency	11.5 ~ 28GHz
3	Pass Band Insertion Loss	≤2.0dB @ 11.5 ~ 12.3GHz ≤1.0dB @ 12.3 ~ 28GHz
4	Pass Band VSWR	≤1.6:1
5	Stop Band Attenuation	≥50dB @ DC ~ 9.8GHz
6	Impedance	50 Ohms
7	Power Handling	15W Max.
8	Connectors	SMA-Female
9	Surface Finish	Guide Oxygen or Painted Black
10	Temperature Range	-55°C ~ +85°C
11	Material	Housing: 6061 Aluminum alloy screw: Stainless Steel Connectors: Stainless Steel
12	Dimensions	15*12.7*10mm
13	Net weight	0.01 KG
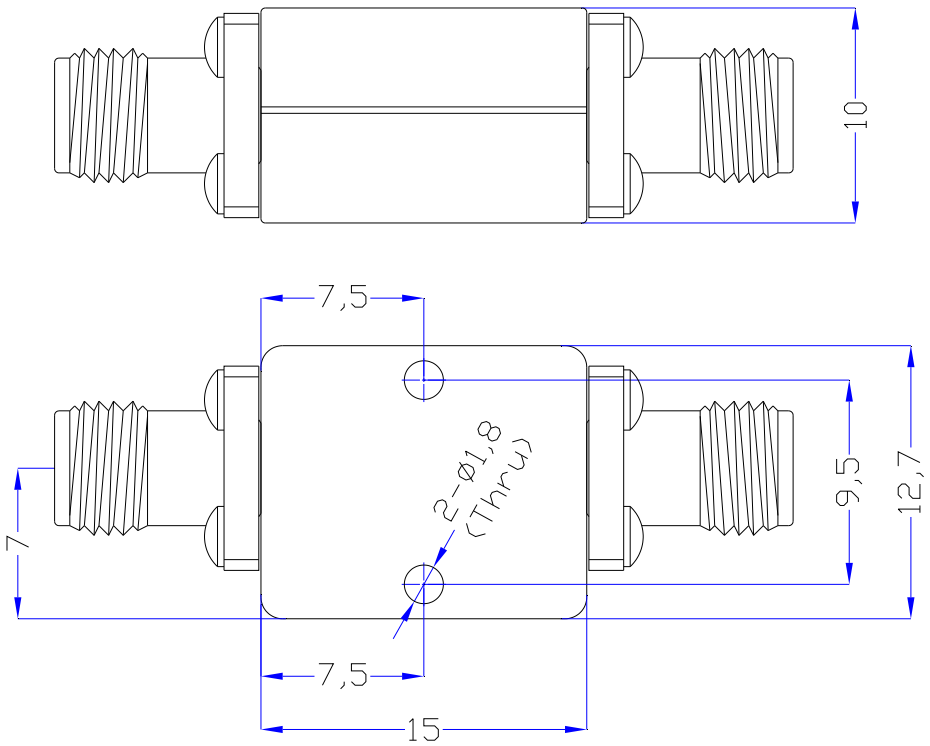
Outline Drawing: (Dimensions Unit: mm, Dimensions Tolerance: ±0.3mm)