WT-A3256-LS

Low Pass Filter

Technical Data Sheet

S/N	Item	Parameters
1	Cut Off Frequency	3.25GHz
2	Pass Band Frequency	DC ~ 3.25GHz
3	Pass Band Insertion Loss	≤1.0dB @ DC ~ 3.1GHz ≤1.5dB @ 3.1 ~ 3.25GHz
4	Pass Band VSWR	≤1.3:1
5	Stop Band Attenuation	≥60dB @ 3.74 ~ 10.5GHz
6	Impedance	50 Ohms
7	Power Handling	15W Max.
8	Connectors	SMA-Female
9	Surface Finish	Guide Oxygen or Painted Black
10	Temperature Range	-55°C ~ +85°C
11	Material	Housing: 6061 Aluminum alloy screw: Stainless Steel Connectors: Stainless Steel
12	Dimensions	42*24*10mm
13	Net weight	TBD
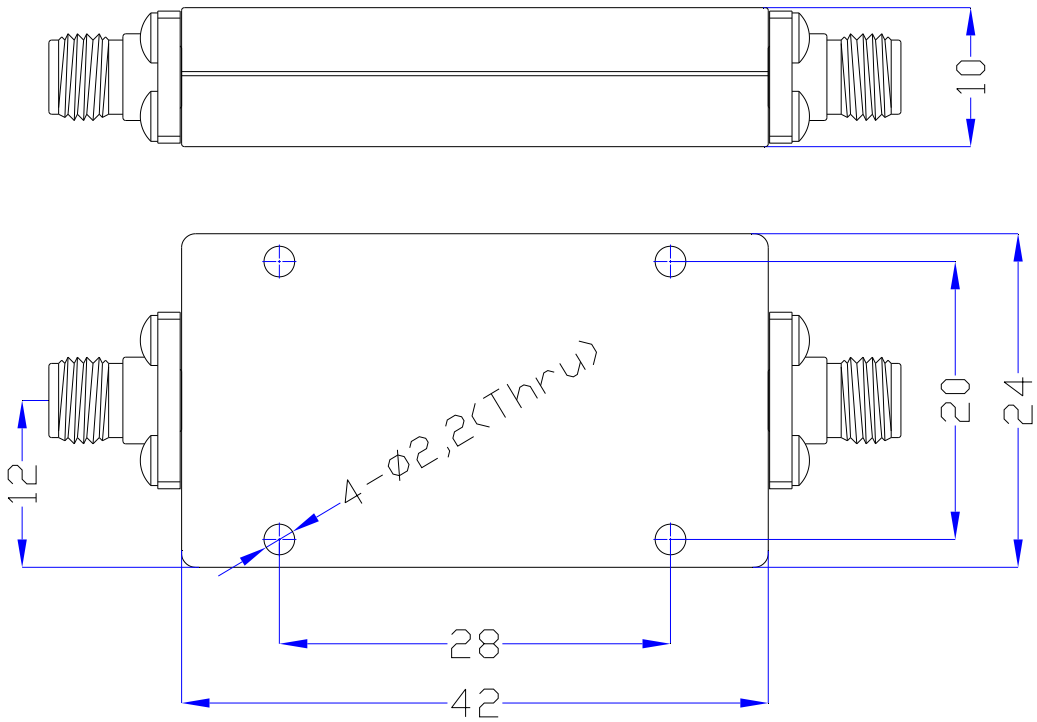
Outline Drawing: (Dimensions Unit: mm, Dimensions Tolerance: ±0.3mm)