# WT-A3255-LS

# Low Pass Filter

# Technical Data Sheet

| S/N | Item | Parameters |
|---|---|---|
| 1 | Cut Off Frequency | 3.0GHz |
| 2 | Pass Band Frequency | DC ~ 3.0GHz |
| 3 | Pass Band Insertion Loss | ≤1.0dB @ DC ~ 2.9GHz<br>≤1.5dB @ 2.9 ~ 3.0GHz |
| 4 | Pass Band VSWR | ≤1.3:1 |
| 5 | Stop Band Attenuation | ≥60dB @ 3.52 ~ 10GHz |
| 6 | Impedance | 50 Ohms |
| 7 | Power Handling | 15W Max. |
| 8 | Connectors | SMA-Female |
| 9 | Surface Finish | Guide Oxygen or Painted Black |
| 10 | Temperature Range | -55℃ ~ +85℃ |
| 11 | Material | Housing: 6061 Aluminum alloy screw: Stainless Steel<br>Connectors: Stainless Steel |
| 12 | Dimensions | 44*24*10mm |
| 13 | Net weight | 0.033 KG |
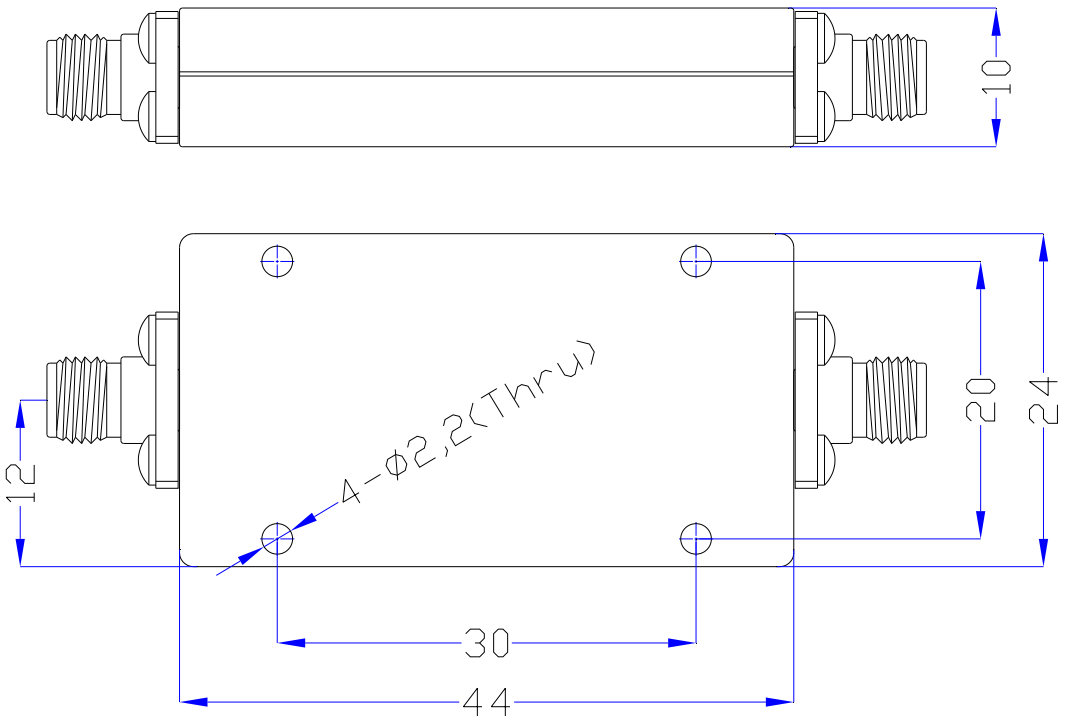
Outline Drawing: (Dimensions Unit: mm, Dimensions Tolerance: ±0.3mm)