WT-B0426-03

Cavity Triplexer

Technical Data Sheet

S/N	Item	Parameters		
		P1	P2	P3
1	Center Frequency(F0)	2000MHz	4000MHz	6000MHz
2	Pass Band Frequency	1950 ~ 2050MHz	3900 ~ 4100MHz	5850 ~ 6150MHz
3	Pass Band Insertion Loss	≤1.0dB	≤1.0dB	≤1.0dB
4	Pass Band Ripple	≤0.5dB	≤0.5dB	≤0.5dB
5	Pass Band VSWR	≤1.4:1	≤1.4:1	≤1.4:1
6	Stop Band Rejection	≥50dB @ 3900 ~ 6150MHz	≥50dB @ DC ~ 2050MHz ≥50dB @ 5850 ~ 6150MHz	≥50dB @ DC ~ 4100MHz
7	Impedance	50 Ohms		
8	Power	20W Max.		
9	Connectors	SMA-Female		
10	Surface Finish	Painted Black		
11	Port Sign	Port 1: ANT ; Port 2: P1 ; Port 3: P2 ; Port 4: P3		
12	Temperature Range	-30℃ ~ +70℃		
13	Material	Housing: 6061 Aluminum alloy Cover: LY12 Aluminum alloy Tuning screw: H62 Copper alloy	Resonant column: H59 Copper alloy Connectors: H59 Copper, Plated ternary alloy Other screw: Stainless Steel	
14	Dimensions	88*67*23mm		
15	Net weight	0.245 KG		
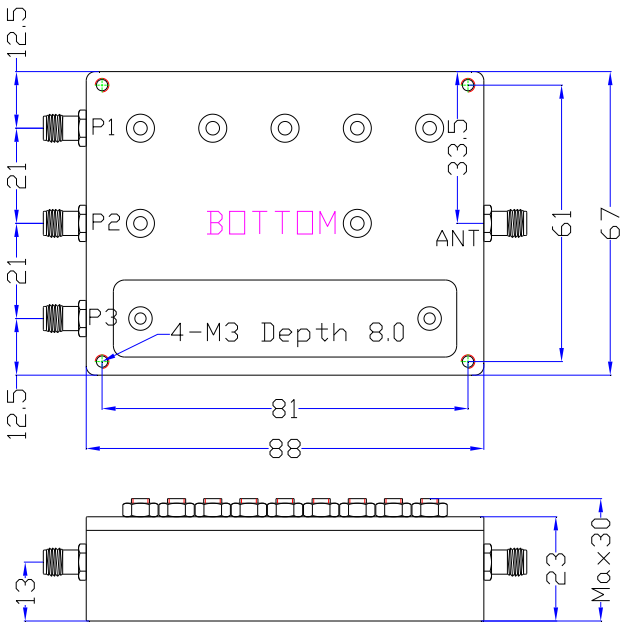
Outline Drawing: (Dimensions Unit: mm, Dimensions Tolerance: ±0.7mm)